TECHNO-ECONOMIC ANALYSIS OF SOLID BIOFUELS AND BIOPRODUCTS PRODUCTION FROM FOREST RESIDUES USING PORTABLE PRODUCTION SYSTEMS

Waste to Wisdom: Subtask 4.1.2

Prepared By:
Kamalakanta Sahoo,[1] E.M. (Ted) Bilek,[1] Richard Bergman,[1] Sudhagar Mani[2]
[1] Forest Products Laboratory, United States Forest Service, Madison, WI 53726, US.
[2] College of Engineering, University of Georgia, Athens, GA 30602, US.

May 2018

This material is based upon work supported by a grant from the U.S. Department of Energy under the Biomass Research and Development Initiative program: Award Number DE-EE0006297.

This Page Blank

Techno-economic analysis of solid biofuels and bioproducts production from forest residues using portable production systems

Kamalakanta Sahoo[1,2*], E.M. (Ted) Bilek[1], Richard Bergman[1], and Sudhagar Mani[2]

[1] Forest Products Laboratory, United States Forest Service, Madison, WI 53726, US.
[2] College of Engineering, University of Georgia, Athens, GA 30602, US.

* Author to whom correspondence should be addressed; E-Mail: ksahoo@fs.fed.us;
Tel.: +1-: 608-231-9272; Fax: +1-608-231-9508.

Abstract

In the US, wildfires are getting extreme and more frequent due to increasingly heavy fuel loads in the forest and extended dry conditions – incurring a loss of lives and considerable property damage every year. Fuel treatments can prevent wildfire but will generate a huge amount of forest residues. The forest residues from fuel treatment and from logging operations, create an opportunity to use forest residues to produce biofuels, bioproducts, and industrial chemicals that could provide environmental benefits, create jobs, and boost rural economies in the U.S. However, the economic feasibility of these products is often doubtful due to very high logistics costs of delivering forest biomass to a large-scale centralized production facility. Either producing densified feedstocks or high-value products using portable or relocatable small-scale production facilities close to the forest could reduce the high biomass logistics costs.

In this study, we analyzed the economic feasibilities of producing woodchips briquettes (WCB), torrefied-woodchips briquettes (TWCB), and biochar from smaller-capacity portable production systems at near-forest locations using data from pilot scale experiments. We used a discounted cash flow rate of return (DCFROR) approach to estimate economic performance indices, to conduct sensitivity analyses and to identify promising cost-reduction strategies. Minimum selling prices (MSPs) – the prices at which the projects' net present values (NPVs) were $0 – were calculated for each product. Using a before finance and tax 16.5% nominal required return on investment, the estimated MSP of WCB, TWCB, and biochar were $162, $274 and $1044/ODMT (oven dry metric ton) respectively delivered to end consumers located 200km away from the plant.

The results illustrated that capital, labor, and feedstocks (processing costs only, without stumpage cost) contribute 16%-30%, 23%-28%, and 10%-13% respectively towards the total

product cost. A payment to forest owners for stumpage (i.e., $30/ODMT of biomass), would increase the MSPs by 21%, 16%, and 13% for WCB, TWCB, and biochar respectively. Realistic assumptions regarding suggested improvement strategies could reduce the MSP of WCB, TWCB, and biochar to $65, $145, and $470/ODMT of products. The economic feasibility may be boosted further considering available credits (i.e., renewable energy credits, carbon credits, etc.). These credits depend on the GHG emissions reduction potential of the products, which can be analyzed in the future with an integrated approach, i.e., integrated lifecycle and techno-economic assessments.

Overall, we found that these portable systems could be economically feasible options to use forest residues and make useful products at current market prices while simultaneously removing hazardous fuels and reducing greenhouse gas (GHG) emissions.

Keywords: Portable biomass conversion technology (BCT), briquettes, torrefaction, biochar, techno-economic analysis and forest residues.

1. Introduction

The world is facing overwhelmingly interlinked global threats – climate change [1], natural resources degradation and food insecurity [2, 3], catastrophic wildfires [4, 5], and social instability [6]. To address climate change, many efforts have been carried out to displace fossil resources with low-carbon renewable resources [7]. Substantial progress has been made to address food insecurity through increasing crop yields with intensive farming, often leading to soil and water resources degradation [2, 8, 9]. To mitigate resource degradation, soil reclamation and restoring water quality have been high priorities particularly during mine reclamation [10]. Wildfire often costs lives and billions of dollars in property damage every year. Large wildfire suppression costs, especially in the western U.S. routinely exceed annual fire suppression budgets [11]. And forest residues, such as logging residues, and dead or decaying trees, can also increase the fire risks [12]. In addition, uncontrolled burning of forest residue causes significant damage to soil under the burning piles [12] and creates air pollution, thus increasing the risk for adverse human health impacts [13].

The Healthy Forests Initiative officially the Healthy Forests Restoration Act of 2003 (P.L. 108-148), promotes the idea of broad-scale forest thinning and fuel treatments as an effective means of mitigating hazardous fuel conditions to reduce the risk of large-scale forest fires as well as maintaining forest health and growth [11, 14]. Forest fuel treatments such as thinning and logging operations can produce a huge amount of biomass [15]. Annually, the U.S. can sustainably produce more than 1 billion ODMT of biomass and a substantial amount (~238 million ODMT by 2022) will come from the forest [16].

The United States adopted the EISA (Energy Independence and Security Act, 2007) mandate [16] and many individual states adopted RPS (Renewable Portfolio Standard) [17, 18] to significantly increase the share of renewable alternative liquid fuels and electricity/power respectively in the country's total energy consumption. The RFS (Renewable Fuel Standard) by the U.S. federal government [19] and the LCFS (Low Carbon Fuel Standard) [20] in California have both set to reduce GHG (greenhouse gas) emissions, which in turn necessitates expansion in bioenergy production.

Over the last several years the U.S. achieved an exponential growth in whitewood pellet (referred to as wood pellets) production for the export market and domestic use [21, 22]. The market for wood pellets can be substituted and supplemented by energy-dense bio-based materials such as torrefied pellets or briquettes. Both later products have higher energy and bulk density than wood pellets and require either minimal or no modification in existing coal power plants for cofiring, which translates into lower capital investment for cofiring [23]. Other than bioenergy, bio-products such as biochar, a carbon-rich (65%-90%) solid material, can be produced from forest biomass. Biochar has been advocated as a soil amendment with the intent to improve soil properties [24], sequester carbon [25, 26], increase water holding [27] and nutrient retention capacity [2], reduce nutrient leaching, and ultimately reduce greenhouse gas (GHG) emissions to the atmosphere [28]. The current niche market of biochar is emerging and – considering its diverse and mass applications (i.e., land applications), – is growing fast towards a gigatonne market potential [29]. In the future – to achieve global sustainable development–, there will need to be a consistent and high demand for pretreated densified biomass to produce bioenergy, biofuel, bioproducts such as biochar, and industrial chemicals.

Both the U.S. Department of Agriculture (USDA) and the U.S. Department of Energy (DOE) are firmly committed to increasing the role of biomass as a clean and renewable energy source and to recognize the long-term positive carbon impacts on the environment. For example, the two departments created the Biomass Research and Development Initiative (BRDI), an interagency program to support the development of a biomass-based industry in the U.S. for environmental protection and energy production. This study was part of a larger project referred to as Waste-to-Wisdom (WTW: http://wastetowisdom.com/), a BRDI led by Humboldt State University [30]. The WTW project investigated integrated harvesting and near-forest bioconversion of post-harvest forest residues to produce high-quality feedstock with low contamination and uniformly–sized feedstock [31].

The major economic hurdle to produce bioenergy or bioproducts using forest biomass is the high logistics cost. Forest residues are dispersed across a large area, and thus incur high harvesting cost during aggregation [32, 33]. Furthermore, biomass transport and handling costs are high due to low bulk density, low energy density, and high moisture content [34]. Biomass densification such as pelleting or briquetting incurs an additional cost but it can reduce the handling and transportation cost between supply (the forest) and demand (e.g., energy plants or bio-refineries) locations [35]. Biomass pelleting is an expensive option that requires a large amount of energy for drying and grinding of biomass into small particles (i.e. 1-3 mm) [36]. Although briquettes have a bulk density similar to pellets, briquetting can be done with much larger particles thus requiring less energy than pelleting [37]. Moreover, the infrastructure required for a briquetting operation is small and briquetting systems can handle a large variability in biomass quality, especially particle size [35].

Although biomass densification improves biomass quality and reduces its logistics costs, densified biomass has many technical and economic disadvantages when directly compared to fossil resources. Densified biomass has lower energy density; it is unsuitable for storing outdoors and co-firing in coal power plants beyond about 10% in the fuel mix; if it is used in a co-fired power plant, it requires additional investment for plant modifications and retrofit [38]. These disadvantages can be addressed through a thermal pretreatment option, e.g., torrefaction – a mild pyrolysis in which biomass is heated to a relatively low temperature (e.g., 200-300 deg. C) for a specific time to change its properties. Torrefied biomass can be densified to briquettes (i.e.

torrefied woodchips briquettes or TWCB) using lower energy and cost compared with torrefied pellets (TOP).

Densified forest biomass such as torrefied or raw pellets and briquettes may have to compete with conventional low-cost fossil resources such as coal used for heat and power production. Forest residues can also be used to produce higher-value products such as biochar and syngas (the latter being an energy-dense feedstock to produce electricity and heat) through pyrolysis, preferably slow pyrolysis (i.e., 20%-40% of input dry biomass).

With the increase in a conversion facility's capacity, its unit production capital cost decreases due to economies of scale. But these very economies adversely affect total biomass logistics cost – which may see sharp increases in transport cost due to diseconomies of transportation, i.e., to fulfill the biomass demand of a larger capacity plant, biomass needs to be collected from farther away from the plant and incurs higher transport cost.

Economic analysis of liquid biofuels or bioenergy products in large-scale facilities has been analyzed considering either centralized [34, 38-40] (Type-I: a centralized large-scale biomass conversion facility with a large biomass draw radius in a region) or decentralized [41, 42] (Type-II: many smaller size conversion facilities with smaller biomass draw radii in a region) or hybrid (Type-III: a centralized large-scale biomass conversion facility and many preprocessing facilities (i.e., depots) to densify biomass and transport high-energy dense biomass to the centralized facility) types of supply chain network structure. The most common pretreatment options used in type-III supply chain networks are thermo-chemical (i.e., torrefaction) and mechanical (pelleting and briquetting) densification [32, 43-45].

The high biomass logistics cost is one of the major hurdles that leads to higher product cost or poor economic performance of the type-I supply chain network [25, 43]. If biomass availabilities are uncertain, then large-scale biomass storage systems have been proposed to reduce supply uncertainties, but these incur additional storage cost to the production system [34, 46]. Type-II supply chain networks incur lower biomass transport cost but higher investment and operational costs in total due to the lack of scale production economies. In either type-I or type-II supply chain network designs, the total cost of biofuel or bioenergy or bioproducts production will be high.

Previous studies had quantified a lower final product cost in supply chain network type-III compared with type-I and II [15, 33, 47-49]. Biomass densification at depots (in type-III supply chain networks) can reduce the transport and handling costs substantially, but still requires large total investment costs due to lack of scale economies at the preprocessing facilities. Therefore, a higher bioenergy or bioproduct production cost is always expected with these three types of supply chain networks if forest residues are considered as a biomass source.

The economic performance of a bioenergy/biofuel plant is affected by facility location, and biomass supply uncertainties have been shown to have a significant impact on a facility's location [42]. The flexibility offered by the option of changing a facility's location (i.e., portable systems) can reduce biomass supply risk. For type-III supply chain networks, if depots are portable (that is, consist of processing systems that can be transported from one location to another based on biomass availability) and send densified biomass to a centralized energy conversion facility, then the total cost of investment for the entire supply chain can be reduced compared with a similar supply chain having fixed preprocessing units [32, 50]. This is due to the requirement of only a few portable-preprocessing units rather than many fixed-preprocessing units to produce a specific amount of products using forest residues in a region.

Furthermore, if bioenergy or bioproduct production facilities can move near to the biomass source, it can substantially reduce logistics costs. For example, portable torrefaction units can be moved near to the forest to make high-energy dense products, e.g., torrefied biomass [51]. There is a cost associated with transporting final products from production locations to end consumers. If a product can find its application near to the production site (i.e., biochar production and application near the forest), the transportation cost for raw biomass and product will be negligible, and that can significantly improve the economic performance of the portable production unit [52]. Moreover, portable conversion facilities are better for geographic regions with lower biomass availability or larger biomass collection areas [32].

As a coproduct or byproduct of higher value timber products production, volatility in biomass supply would be strongly linked to volatility in markets for lumber and potentially pulpwood. Therefore, there are high uncertainties and potentially large variations in supply volume

and logistics cost for a large-scale plant using forest residues. These issues can be addressed through portable/transportable/mobile manufacturing units [39, 48, 53].

Three types of portable systems are available that can be classified based on ease of mobility and relative capacities, i.e., (i) mobile, (ii) transportable, and (iii) relocatable [15]. The ease of moving these facilities decreases with increasing system capacity. In order to quantify the tradeoff between centralized large-scale and relatively small mobile, or transportable, or relocatable conversion units, Polagye et al. [15] assumed cost inputs for pilot scale facilities and compared the production of wood pellets, bio-oil, and methanol using four different classes of production facilities ranging from large-scale stationary (1653 MT/day) to small-scale mobile systems (10 MT/day). Among the different scale of production facilities, the pellet production cost using the portable system was highest mainly due to use of diesel generators and labor. However, it was suggested that the cost of production can be reduced by putting multiple parallel units at a location[54] due to more efficient labor use and the use of waste heat from the production process to dry input feedstocks, especially in pyrolysis or torrefaction [55]. A similar approach but using experimental data can be used to analyze the economic feasibilities of woodchips briquettes (WCB), torrefied-woodchips briquettes (TWCB), and biochar using forest residues.

The economic feasibility and scale of economics of mobile production facilities were little understood [27] and need to be analyzed further [51]. That was part of the objective of the Waste to Wisdom project [30].

There can be high power requirements to operate preprocessing units, such as torrefaction and briquetting units and grid connectivity at near-forest setups may not be feasible. Thus, to analyze financial feasibility of these portable systems, it is also necessary to consider external power sources such as fossil fuel powered generators or renewable gasifier-based electricity generating units [56].

Biomass quality such as moisture content (MC) and size significantly affect system productivity and economic feasibility [55]. Woodchips with higher MC wet basis (i.e. $MC_{wb} > 20\%$) are unsuitable for either making briquettes or for torrefaction or making biochar [37, 57]. Pre-drying of woodchips is required for higher yield and quality products [55]. Waste heat from biochar or torrefaction can be used to dry wet biomass [51, 58]. In contrast to the torrefaction

process or biochar production, briquetting does not produce waste heat, thus requires additional heat energy to dry higher MC woodchips.

In summary, forest residues can be used to produce solid biofuels and biochar through portable systems in near-forest settings to reduce forest residues transporting cost; and to minimize the impact of temporal and spatial variability of biomass availability on plant operations and supply chain performance. A comparative economic performance analysis of these products can provide useful and critical information to investors, forest owners, and policymakers for better decision making and appropriate forest residues utilization.

In this paper, we develop a comprehensive discounted cash flow rate of return (DCFROR) model and estimate the financial performance indicators to evaluate the economic feasibility of producing WCB, TWCB, and biochar using forest residues in portable manufacturing units in near-forest settings. A lifecycle costing approach is followed that includes forest residues logistics, comminution, product manufacturing and handling, and delivery to customers. The data used in this study come from experimental studies on forest residues logistics, and commercial scale portable production units, i.e., briquetter, torrefier, and biochar units. A sensitivity analysis identifies the most critical input parameters affecting the financial feasibility of these production units and leads to suggestions for recommended possible improvements.

2. Methods

The techno-economic analysis of the portable bioenergy and bioproducts systems using forest residues [as part of the Waste to Wisdom (WTW) project] was conducted using a discounted cash flow rate of return (DCFROR) model following a life-cycle costing approach. As part of the financial performance, the DCFROR model provided minimum selling prices (MSPs) along with a breakdown of capital and operating costs for the three biomass conversion technologies (BCTs) at the near-forest setup. Most of the technical inputs used in this study were adopted from experimental studies performed at small-scale using portable systems from the WTW project's partners (figure 1) [37, 51, 55, 57, 58].

Figure 1: Biomass conversion technologies (BCTs) used in WTW project

The actual experimental studies were performed with a single production system, i.e., either a woodchips briquetting system, or a torrefied-woodchips briquetting system, or a biochar production system. However, the throughput of these production systems varied widely, which would have created inconsistent results and analysis, especially if the results were compared among different products. The feasibilities of putting more than one parallel system had been proposed in previous studies also [54]. So to more-closely match the capacity of these three production systems, and to make more efficient use of labor, we assumed the WCB system would operate with two woodchips briqutters, the TWCB system would have one torrefier and one briquetter, and the biochar system would operate with two biochar machines.

2.1 Feedstocks and system boundary

This study considers forest residues generated from timberland during commercial logging operations to harvest sawtimber. The logging operation generates forest residues that includes non-merchantable trees (i.e., hardwood, small-diameter trees, dead trees, etc.) and the remaining portions of trees (i.e., treetops, branches, etc.) after removing saw-timber [31, 59]. Biomass sorting

and treetop processing have been proposed as the best management practice for timberland to handle forest residues [31]. This process generates high-quality feedstocks necessary for efficient production of bioenergy and bioproducts (i.e., woodchips briquettes (WCB), torrefied-woodchips briquettes (TWCB), and biochar) [60]. To conduct a fair assessment, the MC for incoming feedstock for all three biomass conversion technologies (BCTs) was calculated from 36% (wet basis). A sensitivity analysis considered feedstock MC at lower or higher levels to estimate this variable's financial impact.

We assumed that forest residues would be available at no cost or free at the forest landing considering benefits due to the cost savings from preparing forest land during replanting [31]. The least-cost logistics option for delivering feedstocks to a BCT site is to process treetops and biomass trees at the forest landing, transport them in log trucks to the BCT site and microchip the treetops and logs there [61].

The total cost incurred due to the transportation of solid wood stems and chipping was considered as the input cost of feedstocks to a portable production system. The estimated cost of transporting logs and treetops to the BCT site from landing sites and microchipping at the site were \$5/ODMT and \$9/ODMT respectively (biomass cost to the production system was \$14/ODMT or \$10.3/green MT @ 36% MC_{wb}) [61]. A sensitivity analysis was performed to analyze the impact of considering an additional cost of biomass at the landing for sorting and processing (\$30/ODMT) [31, 61] or a payment to forest owner for forest residues.

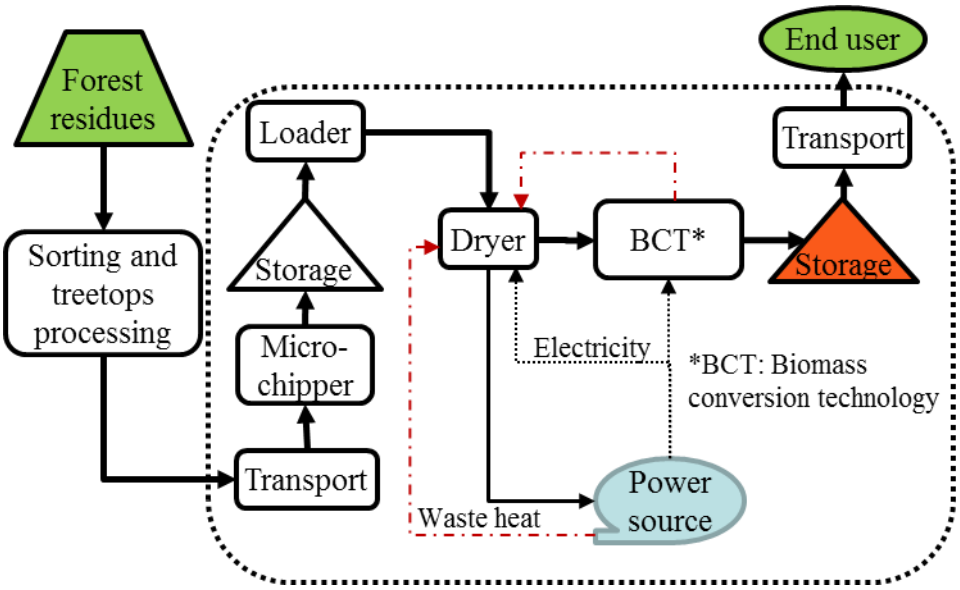

Figure 2: Process flow diagram and system boundary of a portable biomass conversion technologies (BCTs) supply chain (* woodchips briquette, or torrefied-woodchips briquette, or biochar)

Figure 2 illustrates the schematic diagram of the supply chain of a product (i.e., either WCB, or TWCB, or biochar) produced through a BCT system using forest residues. There will be few possibilities of electricity grid connectivity near a forest BCT site, thus requiring generators to operate portable systems. In this study, we have considered portable gasifier-based generators to fulfill the electricity demand for operating each production systems. The high moisture content (36% MC_{wb}) woodchips were dried with a belt-drier using waste heat from the BCT and gasifier-based generator and/or external propane (if required) to a required moisture content depending on its use in a BCT, e.g., briquetting requires biomass about at 10% MC_{wb} [57], as does torrefaction [37], and slow pyrolysis (biochar production) used biomass at 22% MC_{wb} [51, 55].

Dried woodchips were processed to either woodchips briquettes (WCB), or torrefied-woodchips briquettes (TWCB), or biochar, and then packaged and, stored temporarily before transporting (i.e., 200 km, one-way) to end consumers. In actual experimental studies, the annual biomass inputs for torrefaction-briquetting units were twice those for the briquetting and biochar machines. The annual woodchips consumption capacity of a BCT site assuming production of either WCB (with two briquetters), TWCB (with one torrefier and one briquetter) or biochar (with two biochar machines) was about 2800, 2600, and 2300 ODMT of woodchips (36% MC_{wb})

respectively. Table 1 provides the specifications of the three products manufactured through portable systems.

Table 1: Specification of woodchips and briquettes

Description	Units	Woodchips briquettes (WCB) [57]	Torrefied-woodchips briquettes (TWCB) [37]	Biochar [58]
Product dimensions (length X width X thickness)	mm	152.4 X 63.5 X 109	152.4 X 63.5 X 109	
Mass throughput (output)	kg/hr	325	552	75
Packing density	kg/m3	800	977	105
Energy density	MJ/kg	16	21.2	32.3
Moisture content	(% wb)	8	0.6	2.2

2.2 System descriptions and technologies

2.2.1 Woodchips briquettes (WCB)

Hydraulic, mechanical or roller presses had been used to produce high bulk density biomass from woodchips, i.e., briquettes (800-1000 kg/m^3) to improve physical and handling properties of biomass [35]. The W2W project used commercial-scale hydraulic operated presses, (i.e., RUF 440, designed capacity of 0.44 MT/hr) to produce WCB from woodchips. Severy et al. [57] provided detailed descriptions of the experiment. Annually, two RUF briquetter would produce about 2800 ODMT of WCB @ 10% MC_{wb}. Figure 3 shows the system's mass balance, and heat and electricity requirements for a BCT site producing WCB.

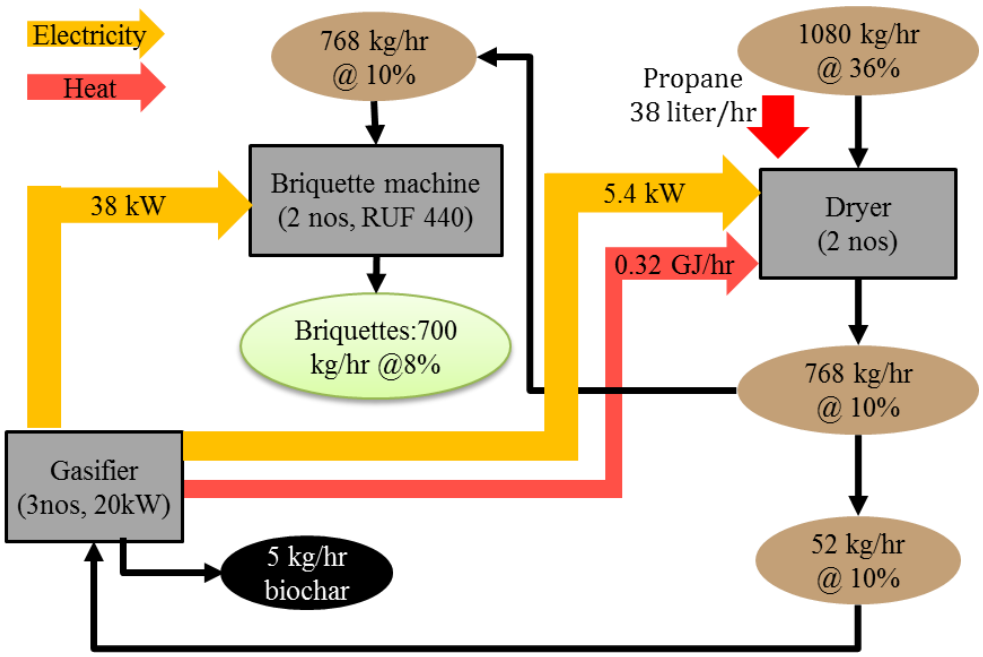

Figure 3: Mass balance, heat, and electricity requirements for woodchips briquettes (WCB) production at a BCT site using portable systems

Three gasifier-based generators (20 kW each) would be able to generate sufficient electricity for the BCT facility's operations. In addition to electricity, each gasifier-based generator can provide about 20 kW of heat through a heat exchanger (assuming 80% efficiency) [62].

Woodchips with higher (>12% MC_{wb}) and lower (<6% MC_{wb}) moisture content are unsuitable for producing good quality briquettes. High MC woodchips were dried to a recommended moisture level (i.e., 10% MC_{wb}) using a conveyor belt dryer [57]. About 0.32 GJ/hr of waste heat from three gasifier generators would be available to dry woodchips. However, each dryer would require about 1.01 GJ of heat to dry 1080 kg of woodchips from 36% MCwb to 10% MC_{wb} (assuming 3.5 MJ of heat required per kg of water removed from woodchips [63]). Therefore, for a wood briquettes system, in addition to waste heat from gasifiers, we estimated that about 38.15 liters/hr of propane would be consumed to provide supplemental heat for drying woodchips assuming 80% burner efficiency and a lower heating value of propane of and 26 MJ/liter [64].

To handle woodchips and products, a front-end loader consumes 3.7 liters of diesel/hr and total of 30 liters/day assuming 50% runtime.

Woodchips briquetting is an established technology and simple operation that requires little supervision and labor. We assumed one technician would be able to manage the BCT site and material handling operation with an annual salary of $52,700 ($20/hr) including benefits. Our base economic calculations were for the plant to be run in two shifts (8 hours/shift) for 300 days in a year.

2.2.2 Torrefied woodchips briquettes (TWCB)

The torrefaction process requires woodchips with lower moisture content and little size variations to produce better quality products. Severy et al. [37] described the experimental setup and performance of the portable torrefied briquettes production system. The optimal operating conditions for the torrefaction and briquetting were lower moisture content of input feedstock (<11%), a short residence time (10 mins) with the reactor setpoint temperature between 400ºC and 425ºC [37].

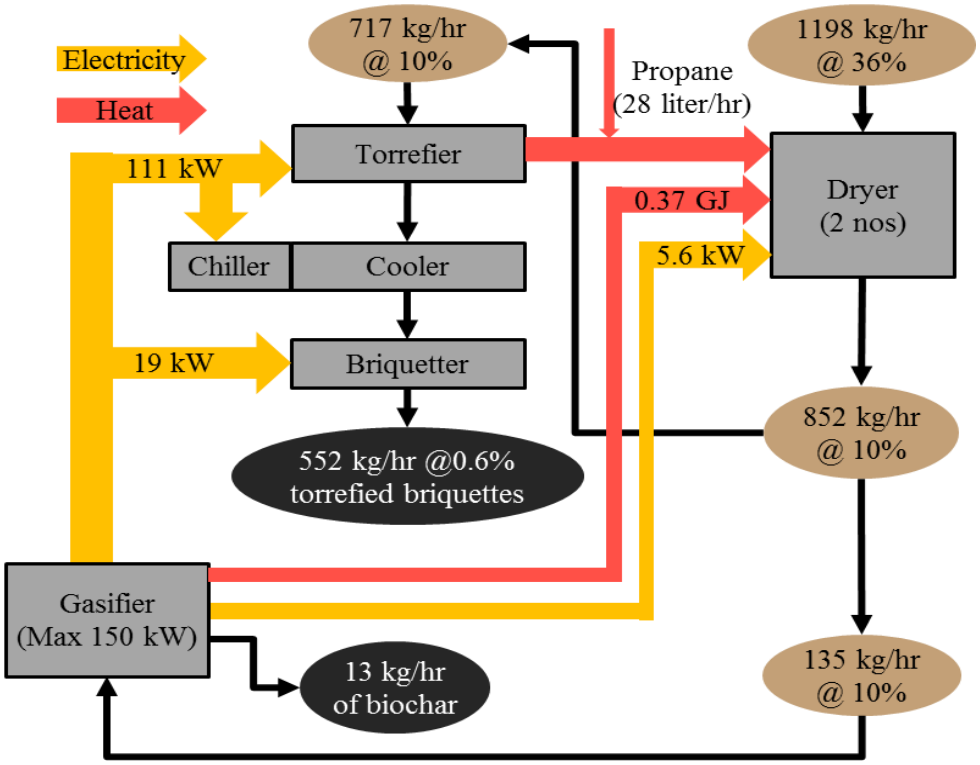

Figure 4: Mass balance, heat, and electricity requirements of an integrated woodchip torrefaction and briquette production system.

Figure 4 describes the mass balance, heat and electricity requirements of an integrated torrefaction and briquetting portable system with an annual woodchips processing capacity of

2848 ODMT/year (36% MC_{wb}). High MC woodchips can be dried to 10% MC_{wb} (Norris Thermal Technologies, 123B Beltomatic) [51] using torgas from the torrefaction processes (Norris Thermal Technologies, CM600) [37], waste heat from the gasifier-based generator (All Power Lab's Powertainer PT150, 150 kW) [62] and propane (if required). The torgas from the torrefaction process had low energy content that required propane supplement during flaring to initiate and maintain the correct combustion temperature [37].

Mass and energy balance estimation illustrated that the gasifier-based generator and torrefier consumed about 16% (135 kg/hr @ 10% MC_{wb}) and 84% (852 kg/hr @ 10% MC_{wb}) of total dried woodchips (input to the production system) respectively. The torrefaction process was able to retain about 85% of the total mass of woodchips [37]. The moisture content of torrefied woodchips was about 0.6%.

The torrefaction reactor was based on an electrically-heated auger that consumes 82% of the total electricity used in this production system. Note that on-site production of the electricity required to heat this auger necessitates a larger gasifier-based generator (150 kW) rather than the multiple smaller (20 kW) generators that are needed by both the woodchip briquette and biochar systems. Following torrefaction, torrefied-woodchips were then cooled with a chiller and densified into briquettes (i.e., TWCB). TWCBs were then packed properly before sending by trucks to the end customers located about 200 km from the modeled BCT location.

2.2.3 Biochar production

Eggink et al. [51] presented an experimental setup to produce biochar from woodchips using an integrated portable system. A biochar machine (Biochar Solutions, Inc.) is able to process about 500 kg/hr of woodchips at 36% MC_{wb} [57] to produce about 75 kg/hr of biochar at 3% MC_{wb}. To provide a reasonably-balanced system, we assumed two parallel biochar units in this study for estimating mass balance and financial analysis (Figure 5). Each integrated system consisted of a biochar machine, a dryer (Beltomatic 123B belt dryer), a cross-flow air-to-air heat exchanger to capture waste heat from biochar machine and a power producing unit [two 20 kW gasifier-based generators (All Power Labs, Inc.)].

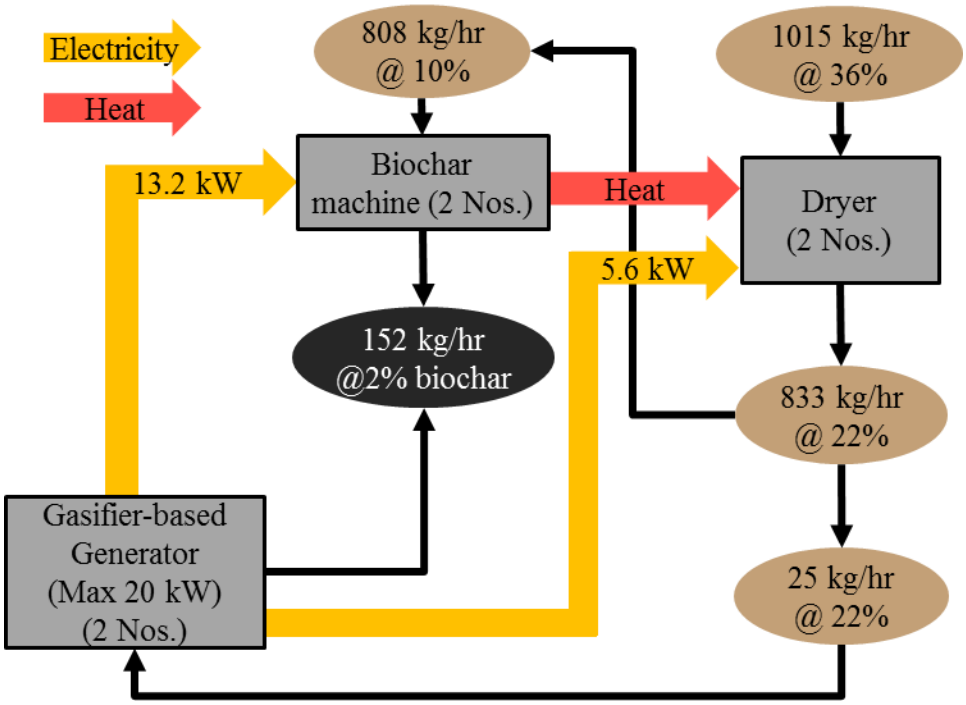

Figure 5: Mass balance, heat, and electricity requirements of an integrated biochar production system.

Two biochar machines and attached dryers consume on average 13.2 (2 × 6.6) and 5.6 (2 × 2.8) kWh respectively to process 1015 kg/hr of woodchips (36% MC_{wb}) and produce 152 kg/hr of biochar (including biochar from the gasifier-based generators) [51]. The power requirements of a biochar system vary widely based on a number of input parameters [55]. Based on the maximum power requirements of the biochar units and their dryers, two 20 kW gasifier genset were modeled in this study. The gasifier-based generators used about 3% of total dry woodchips input to the integrated system.

2.3 Financial model

2.3.1 Minimum selling price (MSP)

The market prices of solid biofuels and bioproducts especially biochar will vary widely depending on the product uses and qualities. However, it should be of use to potential investors to know the minimum selling prices (MSPs) for the systems' products. The MSP is the price at which a system's net present value (NPV) is zero, i.e., if a product is sold for the MSP, the discounted revenue generated will be equal to total discounted costs over the project's life.

Of course, all the assumptions that go into the DCFROR model will have an impact on the MSP. Our major general financial assumptions for the DCFROR model were a 16.5% discount rate (nominal, before finance and tax), 6.51% loan interest rate (nominal), 40% income tax rate [65], and 2% inflation per year (for both costs and revenues)[66]. We assume that the initial capital cost is partly financed through debt (40% of initial capital cost with a 5-year loan term) and equity (60%) composing the remainder of the financing and a 10-year project planning period. The rate of federal income taxes, state taxes, and ad valorem taxes were set at 35%, 6%, and 0.2% respectively.

The model also allows for a user to enter custom depreciation each year of the project's life, if desired. In this study, we assumed a declining balance (DB) depreciation of 200% on the assets' values using IRS guidelines. All capital and operating cost estimates were adjusted to U.S. 2017 dollars using the Chemical Engineering Price of Construction Indices (CEPCI) and the Consumer Price Index (CPI).

The portable system requires a significant amount of time for starting up and shutting down each day. For example, the biochar system requires one hour for startup and a half hour for cool down.[51] To help reduce the portion of non-productive hours, we assumed that the equipment would be operating 16 hours/day (2 shifts × 8 hours/shift). We assumed the annual scheduled operating hours to be 4800 hours (300 days × 16 hours/day). Furthermore, to allow for start-up, we assumed that the BCT operates at 50% of its nameplate capacity in the first year and at 80% from the second year onward.

The input cost in the financial models is categorized into the capital cost and operating cost. The capital and operating cost for the three portable systems are presented in Table 2 and 3 respectively.

2.3.2 Capital cost

Table 2 presents the purchase prices, useful economic life, and salvage value associated with each piece of equipment used for producing woodchips briquettes (WCB), torrefied-woodchips briquettes (TWCB), or biochar in a portable production system at a BCT site. Each BCT site requires a front-end loader to handle the raw materials and products.

Due to the portability of the production system, the cost of site preparation and installation were considered as an annual fixed operating cost. We have not considered a land purchase or rental cost for these portable systems as (i) a portable system will require only a small land area, and (ii) the rent paid for the land near the forest will be very low or negligible. If a price for equipment of a required capacity was not available, we have used a scaling factor (i.e., 0.6) to estimate capital cost for that equipment with respect to the available cost figures for existing equipment.

Table 2: Capital costs in woodchips briquettes, torrefied briquettes, and biochar production systems

	No of units	Equipment	Description	Purchase price($)	Economic life (year)	Salvage Value (%)	Reference
Woodchips briquettes (WCB)	1	Tractor + loader	Tractor 1023E (22.4 PTO hp)+ loader	15,000	10	20	Manufacturer price
	2	Dryer	Beltomatic 123B (3.6 m x 0.69 m)	45,000	25	20	Manufacturer price
	2	Briquetter	RUF 440	105,000	21	20	Manufacturer price
	3	Genset	20 kW, PP20GT gasifier	25,000	18	10	Manufacturer price
		WCB production facility total		***$390,000***			
Torrefied-woodchips briquettes (TWCB)	1	Dryer	Beltomatic 123B (3.6 m x 0.69 m)	45,000	25	20	Manufacturer price
	1	Torrefier	Norris Thermal Technologies Biogreen CM600	600,000	10	20	Manufacturer price
	1	Briquetter	RUF 400	105,000	15	20	Manufacturer price
	1	Genset	150 kW, Powertainer-PT150 gasifier genset	150,000	15	10	Manufacturer price
		TWCB production facility total		***$960,000***			
Biochar	2	Dryer	Beltomatic 123B (3.6 m x 0.69 m)	45,000	25	20	Manufacturer price
	2	Biochar machine	Biochar Solutions, Inc., 0.5 MT/hr	340,000	10	20	Manufacturer price
	2	Genset	20 kW, PP20GT gasifier	35,000	18	10	Manufacturer price
		Biochar production facility total		***$955,000***			

2.3.3 Operating cost

Operating cost includes all fixed and variable costs associated with the production systems. The fixed operating cost includes annual insurance (1.5% of average annual investment), property taxes (1% of the present value of the equipment), repair and maintenance expenses (estimated at 15% of straight-line depreciation), and total cost of relocations (multiple). Table 3 presents the operating costs considered in this study.

Table 3: Annual operating costs incurred in different production systems

Sl no	Descriptions	Units	Woodchips -briquettes (WCB)	Torrefied-woodchips briquettes (TWCB)	Biochar	Comments
1	Feedstocks[a]	$/ODMT	14.0	14.0	14.0	Micro-chipping and transportation
2	Relocations[b]	$/year	20,868	24,460	22,636	Assuming two relocations in a year
3	Repair and maintenance[c]	$/year	8,072	32,912	19,246	15% of SLD
4	Consumables[d]	$/year	74,334	53,132	1,785	Annual usage of diesel and propane
5	Packaging[e]	$/ODMT	5.5	6.1	124.1	[67, 68]
6	Finished good transportation[f]	$/ODMT	21.0	20.0	52.0	Estimated, [61]
7	Labor[g]	$/Year	114,904	181,841	181,841	
8	Insurance and miscellaneous[h]	$/2000 hrs	5,200	17,100	11,100	

[a]The cost of transportation and micro-chipping were estimated to be $7.0/MT and $3.5/MT assuming 36% MC_{wb} of logs and processed treetops [61].
[b]Relocation cost includes site preparation (leveling and putting gravel), disassembling and assembling of equipment at the site. We assumed a 50 x 25 m land area was leveled and filled with gravel (@$13/m^2) [69]. For each relocation, the BCT site for both biochar and WCB production facilities require 8 hours of assembly and disassembly ($28/hr); 4 hours of loading and unloading equipment ($100/hr)and 50 km of transportation ($2.6/km) and two trucks. However, relocations of TWCB production facility require 12 hours of labors for assembly and disassembly, 12 hours of loading and unloading.
[c]We have used 15% of SLD (straight-line depreciation) as repair and maintenance cost.
[d]Consumables includes propane (in the exhaust) and diesel (in front-end loader).
[f]Estimated as mentioned in Sahoo et al. [61].
[g]Labor cost includes basic salary and 35% of fringe benefits [70].
[h]Miscellaneous include unpredictable cost, administrative cost, 10% of annual salaries @$80,000.

2.3.3.1 Feedstocks procurement

During logging operations, implementation of biomass sorting and processing of treetops reduces effort and expenses during replanting. Therefore, we assumed the cost of this high-quality biomass is free at the landing because it is offset by reduced reestablishment costs [13, 31]. The least-cost option to supply biomass was determined to be transporting nonmerchantable logs and processed treetops with trucks to a portable BCT location and microchipped at the site [61].

The capacities of the microchippers were much larger than the capacities of the portable BCT systems. Therefore, we assumed that chipping was performed by a third party who would chip a large volume of logs (i.e., 1-2 weeks demands of the portable systems) and store the chips at the site. The estimated cost of chipped forest residues was about $14/ODMT. The input cost of woodchips included transportation cost of small logs ($5/ODMT) and microchipping ($9/ODMT) [61].

2.3.3.2 Relocation and site preparation

The cost incurred due to relocating portable system depends on the size of the manufacturing unit, travel distance, and machine and labor hours required for disassembly and assembly the production system. Polagye et al. [15] noted that the time required for relocating a plant varied from 4 hours for a plant with a capacity of 10 MT/day to 2 months with a 500 MT/day capacity. Relocating a portable plant includes the cost of preparation, disassembly of equipment, loading equipment onto trucks, transportation, unloading equipment at the site and reassembling the equipment.

We assumed a portable plant will require a 40 x 20 m land area that will be leveled and filled with gravel (@$13/m^2). For each relocation, a BCT site with biochar and briquetting requires 8 hours of assembly and disassembly (@ $28/hr); 4 hours of loading and unloading equipment (@ $100/hr)and 50 km of transportation (@ $2.6/km) and two trucks. However, relocations of torrefied woodchips briquettes BCT require 12 labor hours for assembly and disassembly, and 12 hours for loading and unloading. The total cost of BCT relocation to produce specific products is shown in table 3.

2.3.3.3 Repair and maintenance

Equipment repair and maintenance consists fixed expenses, as well as variable expenses that are based on annual usage. While in general, repair and maintenance may be expected to increase as equipment is used and ages, it is also an expense that depends on how individual pieces of equipment are used and on operator skill. Long-term repair and maintenance record datasets are not available for most equipment, and not for the new mobile systems considered in the Waste to Wisdom project. As a result, we based repair and maintenance expenses on a fixed percentage of a straight-line depreciation calculation over each piece of equipment's economic life. The

percentage was based on repair and maintenance costs observed by Severy et al. [37], Severy et al. [58], and Eggink et al. [51]. For example, the estimated labor hours required for maintenance for a biochar, dryer, and torrefaction equipment were about 20, 21 and 90 hours per 2000 hours of use which can be about 10-20% of annual depreciation cost. Therefore, we assumed a 15% of straight-line depreciation as the annual cost of repair and maintenance. Recognizing that repair and maintenance costs will be low during initial years and will increase with increasing equipment usage, the economic model we developed is able to accommodate increasing annual repair and maintenance costs or any customized repair and maintenance cost functions if more accurate repair and maintenance cost information is known.

2.3.3.4 Consumables

Diesel was used to operate a front-end loader to load feedstocks into the production systems and to handle final products. It was estimated that the front-end loader uses about 3.7 liters of diesel per working hour [71, 72].

Propane was used to maintain the flame during flaring of gases (torgas in the torrefaction process and syngas in the biochar production process) and during daily startup of equipment in torrefaction and biochar production. The torgas produced from the torrefaction process did not burn itself and required external fuel for flaring (i.e., 29 liter/hr of propane). Although the syngas produced during biochar production can burn itself, it still requires a small amount of propane (i.e., 1 liter/hr) to maintain the flame. While the waste heat generated from gasifier-based generators, and biochar or torrefaction production processes, was estimated to be sufficient to dry high moisture content woodchips coming to the system, the WCB production system would additional external drying heat that can be supplied with propane.

For drying biomass (36% MC_{wb} to 10% MC_{wb}) in WCB production, each MT of biomass (@36% MC_{wb}) required about 35.48 liters of propane (assuming about 37% of heat requirement was supplemented by waste heat from wood gasifier generators). Therefore, WCB portable system (1.1 MT woodchips/hr) required 38.15 liters/hr in this study.

The RUF briquetters were able to form durable briquettes from both woodchips and torrefied chips without any additional binders. Therefore, the budgeted consumables did not include binders.

2.3.3.5 Labor

The labor requirement may be different for different products. Biochar production required 0.92 labor hour required per machine hour [51, 73]. Therefore, we assumed two workers, that is one technician, and one helper/yard worker, would be needed to manage the biochar production facility. Similarly, two workers were considered necessary to operate the torrified-briquetting unit. Briquetting technology is well established and relatively simple; far more so than either torrefaction or biochar production. Therefore, we assumed only one technician to manage the portable briquetting facility. The annual salary of a technician and yard worker were assumed to be $52,700 and $30,700 respectively, which include benefits at 35% of basic salary [70, 74]. Annual labor expenses for each BCT units are presented in table 3.

2.3.3.6 Product handling and transportation

A product's bulk density dictates its transport and handling costs. Briquettes were assumed to be packed in smaller bags and loaded on pallets. The cost of packing was estimated to be about $5.5 and $6.1 /ODMT for WCB and TWCB respectively [67]. Biochar bulk density is about $^{1}/_{9}^{th}$ that briquettes and it requires large bags for packing. The estimated cost of packing biochar in bags was $124/ODMT (0.76 m^3/bag, $10/bag, biochar density=0.106 ODMT/m^3).

Biomass briquettes and torrefied briquettes also have lower unit transportation costs compared with biochar due to in large part due to differences in bulk density. The estimated transport cost of WCB, TWCB, and biochar were $21, $20, and $52 per ODMT of product respectively assuming a 200 km transport distance [61].

2.4 Sensitivity analysis

The portable systems using BCT are relatively new and emerging concepts to utilize forest residues to make fuels and bioproducts. The performance of these systems will improve as the technologies grow and mature. Sensitivity analyses of input parameters for the base case portable BCT systems were conducted to determine key input parameter variations impacting each product's MSP. The DCFROR models for each product were simulated with changing the value of one input parameter by ±20% of base value while keeping other parameters unchanged and measuring the changes in the MSP. We estimated the variations of MSP with respect to positive

and negative changes to each input parameter but presented the impact of only a few most sensitive ones as a bar chart and analyzed its scope.

In the field or practical applications, the changes to these input parameters can occur beyond ±20% and these changes can occur simultaneously to a group of the most sensitive input parameters. Therefore, we quantified the maximum or minimum possible variations in the MSP with respect to these most sensitive input parameters and suggest possible strategies to achieve lower MSPs for each product.

3. Results

This paper's focus is the techno-economic performance of small-scale portable systems used to transform residues from forest logging and thinning operations into quality woodchips and then further densify them into biofuels or bioproducts. We considered three technologies to convert forest residues to useable products: (a) WCB through densification (i.e., briquetting); (b) TWCB through torrefaction and densification, and (c) biochar through slow-pyrolysis. The financial performance indicators were calculated considering (i) before financing and tax, (ii) before tax and (iii) after-tax basis. The estimated MSP considering these three situations vary based on the type of financing, especially the share of debt, equity, and grants used to finance a project.

3.1 Wood consumption and conversions

The annual feedstock consumption by the briquetting, torrefaction and briquetting, and slow-pyrolysis (biochar production) systems would be about 2,625, 2,850, and 2,300 ODMT/year of woodchips to produce 2,450 ODMT of WCB, 2,040 ODMT of TWCB, and 535 ODMT of biochar respectively. Note that in the biochar production system, the mass conversion ratio of products to input is much lower (i.e., 23%) than others (i.e., 85% for TWCB and ~98% for WCB).

3.2 Capital and operating costs

The before finance and tax annual total costs [annual operating cost + annualized capital cost] incurred in WCB, TWCB, and biochar portable production systems were $580,000, $790,000, and $720,000 respectively. Figure 6 shows the contribution of different types of costs incurred in each production system. The contribution of capital expenditure (CAPEX) was low (17-32%) compared with operational expenditure (OPEX) (68-83%). Briquetting is a commercial

technology and simple operation compared to torrefaction or slow-pyrolysis. Therefore, the share of capital in the total cost of making briquettes from woodchips was lowest among all the technologies considered.

The cost share of feedstocks was 7-10% of total cost due to the assumption that forest residues can be available free at the landing or forest (Figure 6). The only cost incurred was logistics cost, i.e., transport of logs from the forest to the BCT locations and chipping at the site.

A substantial portion of the OPEX in all three systems was labor cost (31-44%) (Figure 6). The productivity per unit labor of these portable systems was very low compared to a large-scale facility. For example, the torrefaction-briquetting portable system produces about 2850 ODMT/year of briquettes with two employees (= 1425 ODMT/employee/year) compared to only nine employees in a large-scale torrefied pellet plant with an annual capacity 100,000 ODMT of pellets (= 11,111 ODMT/employee/year) [40].

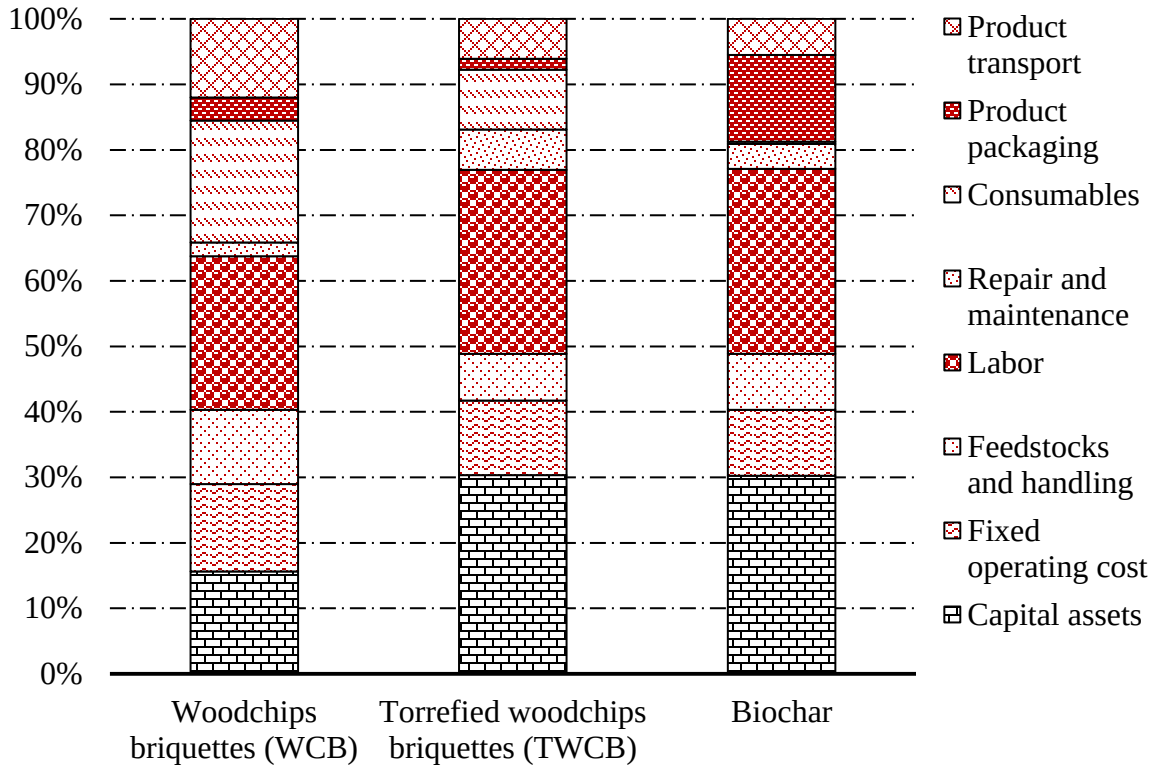

Figure 6: Contribution of different costs to total cost of the plant (CAPEX and OPEX before finance and tax)

In the WCB production system, a large portion of the total cost was consumables due to the use of propane to dry high moisture feedstocks (Figure 6). TWCB and biochar systems use waste heat in drying high-moisture feedstocks and require propane only to burn torgas [37] or to maintain the flame in the flaring unit to oxidize pollutants such as volatiles in the exhaust gas [58].

Biochar packaging was about 12% of total cost (i.e., $124/ODMT) due to its low bulk density (0.1 ODMT/m^3) [58] compared to the bulk density of WCB (0.8 ODMT/m^3) [57] or TWCB (0.95 ODMT/m^3) [37]. The unit transportation cost of biochar was about 2.5 times that of briquettes. But the total annual transportation cost was much lower in biochar production system compared with briquettes due to the low mass recovery of biochar compared with the other two products.

In summary, figure 6 shows the different cost segments and their share of the total annual production cost for all three portable systems. It helps to identify the most critical segments of these portable systems for improvements to reduce production cost. A detailed sensitivity analysis of input factors provides the specifics and opportunities to reduce cost, which are discussed in the later section of this paper.

3.3 Financial performance of portable BCT systems

The type of financing a project has and its taxes affect the financial performance of production systems. Table 4 provides the financial performance, including MSPs, of three portable BCT systems. Before finance and tax, the estimated minimum selling prices of WCB, TWCB, and biochar delivered to consumers were $161.5, $274.3 and $1044.2/ODMT respectively. These product MSPs would provide a nominal IRR [internal rate of return, which is a discount rate at which NPV = $0] of 16.5 % including 2% inflation.

Table 4: Financial performance of portable BCT systems

		Before finance and tax	Before tax	After Tax
Woodchips briquettes (WCB)	**Total cost ($, ×10^6)**	**$2.2**		
	MSP ($/ODMT)	161.5	153.0	156.4
	Nominal IRR (%)	16.5%	19.8%	14.4%
	Break-even delivered feedstock cost ($/MT)	10.3	23.4	20.1
	Break-even product value [medium-term operating] ($/ODMT)	136.7		
	Break-even product value [short-term operating] ($/ ODMT)	113.2		
Torrefied woodchips briquettes (TWCB)	**Total cost ($,×10^6)**	**$3.1**		
	MSP ($/ODMT)	274.3	250.8	257.0
	Nominal IRR (%)	16.5%	19.9%	15.2%
	Break-even delivered feedstock cost ($/MT)	10.3	21.0	18.1
	Break-even product value [medium-term operating] ($/ODMT)	190.7		
	Break-even product value [short-term operating] ($/ ODMT)	153.7		
Biochar	**Total cost ($, ×10^6)**	**$2.9**		
	MSP ($/ODMT)	1044.2	941.3	962.8
	Nominal IRR (%)	16.5%	19.8%	14.4%
	Break-even delivered feedstock cost ($/MT)	10.3	23.4	20.1
	Break-even product value [medium-term operating] ($/ODMT)	710.1		
	Break-even product value [short-term operating] ($/ ODMT)	588.7		

The MSPs estimated before-tax and after-tax were about 5-10% and 3-8% lower than the MSP for before-finance-and-tax. This illustrates the impact that favorable financing can have on reducing MSP. However loans increase a firm's business risk by obligating cash flows to repay the loan; and the more a firm's cash flows become obligated, the riskier the loan repayment becomes, and the higher the interest rate will likely be. This relationship is not incorporated into the financial model. It will in part depend on a firm's lenders and the user is expected to be aware of the range over which an interest rate will be valid.

Table 4 also provides information about breakeven procurement cost of feedstocks and break-even product price in short and long-term. For example, if the TWCB selling price is $274.3/ODMT, the plant would be able to procure forest residues at a maximum cost of $18.1/MT and still achieve an IRR of 15.2% (after-tax basis). Similarly, portable production systems for WCB and biochar would be able to afford raw woodchips at the maximum cost of $20.1/MT (including transportation and chipping) to achieve an after-tax IRR of 14.4%. In the short-term, a plant must able to generate revenue by selling products to meet its variable operational expenses. In the medium-term, all operating expenses (fixed + variable), and loan repayment must be covered by selling the product. In the long-term, all of the short-term and medium-term costs must be met, and in addition, the investors must receive at least their required minimum rate of return in order to get capital reinvestment and maintain a vibrant industry.The short-term-MSP (or long-term-MSP) for WCB, TWCB, and biochar were estimated to be 70% (or 85%), 55% (or 69%), and 58% (or 69%) of MSP (before-finance-and-tax) respectively. The portable production systems may hold or stop operation, if the plants are unable to generate enough revenues by the selling the products at these MSPs (short-term) to bear the cost of plant operations.

3.4 Sensitivity analysis

3.4.1 Sensitivity analysis results

Uncertainties and variabilities in the input data and assumptions are inherent to these portable production systems. All inputs to the financial model were changed by ±20% of mean value and responses in terms of increase or decrease in the MSP were calculated. A summary of these results is shown in figure 7.

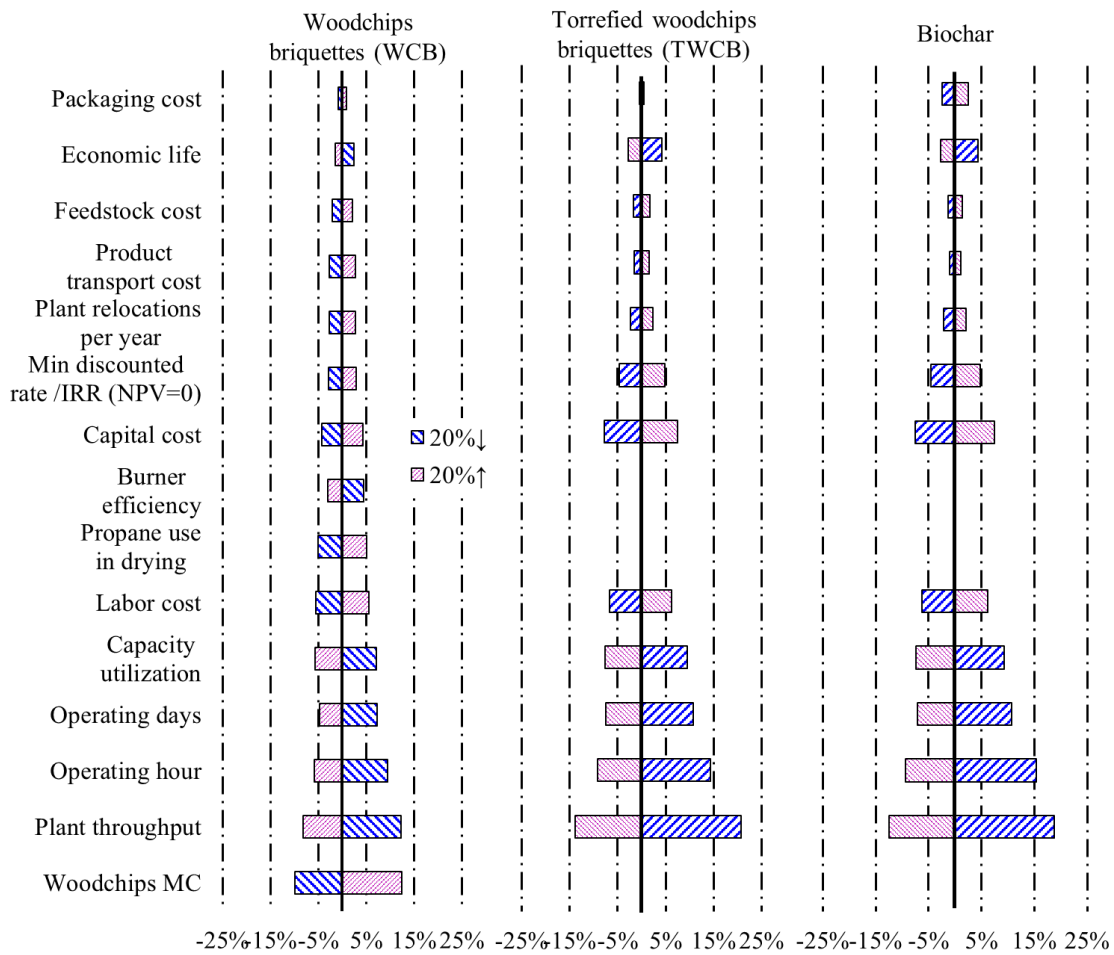

Figure 7: Sensitivity analysis of input parameters on minimum selling prices of products

Figure 7 presents the impact of most sensitive input parameters in the model on MSP of WCB, TWCB, and biochar. The moisture content of woodchips is the most sensitive input parameter for WCB. But it was not a sensitive input parameter for the other two products. A large amount of heat energy (i.e., 4 MJ/kg of moisture removed from woodchips) is required to dry high moisture content woodchips. WCB requires external fuel such as propane for drying of woodchips (e.g., 0.0354 liter of propane/kg of woodchips @36% MC_{wb}). But the TWCB and biochar systems both generated enough waste heat in the production processes to dry wet woodchips. The MSP of WCB was decreased by 10% or increased by 12.5% by using woodchips at 29% or 43% moisture.

Improvements in burner efficiency (in the dryer) can reduce the MSP by reducing the use of propane during woodchips drying. An increase in the plant throughput by 20% could reduce the MSP by 12-20%. Plant throughput could be increased in a number of ways; e.g., through an

improvement in machine throughput, or an increase in working days, or longer working hours in a day, or improved capacity utilization.

A substantial part of the working time in a day was lost due to idle time in warmup and shutting down of equipment, especially for the biochar and torrefaction units. A 24×7 operation could reduce non-productive times such as startup and shutdown of equipment and enhance the daily throughput in each portable system. A 20% variation in the capital cost brought about 4-8% changes in the MSP. Feedstock cost was of the least sensitive among all input parameters to the model.

The sensitivity analysis shows wide variation in the relationship between changes in the models' input variables and their impact on MSP. In practice, the quantum of variations is different for each input variable. Therefore, the total impact on the performance indicator by an input variable is a combination of its sensitivity and its actual variations from the mean value. For example, the scope of improvement in plant capacity utilization can be at maximum 20% assuming the mean capacity utilization of 80% but this can have very large influence in changing a product's MSP. On the other hand, cost of feedstock can vary up to 300% or more but this had a very low impact on product's MSP. If feedstock costs increase by 300% (i.e., assuming additional $30/MT of forest residues compared to mean input $10/MT that we used) can push the MSP to a much higher level as estimated here. Therefore, a detailed analysis is required to quantify potential decrease or increase in the MSP considering the influence of input parameters and evidence-based variations of its values in real case studies.

3.4.2 Sensitivity analysis limitations

While the sensitivity analysis highlights the potential impact of the most critical variables on the MSP and points to facets of the operation that offer the greatest potential for improvement (and conversely the variables that are most critical to achieving a target rate of return), there could be production relationships that exist that are not now included in the models. For example, the sensitivity analysis showed that increasing capacity utilization, perhaps by extending the working day, could reduce MSP. While this would result in better capital asset utilization, there may also be an increase in repairs and maintenance costs that are not reflected in the models that we developed. Extending the workday may result in having to hire and train additional workers, which

may in turn require higher wages or may result in a loss of efficiency while new workers are learning the operation. Having existing workers work longer days may result in overtime wages and possibly lower productivity in the extended hours.

While we have tried to capture the critical variables and make models that are flexible to changed circumstances and better information, there could be factors that we have not incorporated, so it is better to view our results as guidelines rather than as absolutes.

4. Discussion

Economic feasibility is one of the biggest hurdles for the wide-scale use of forest residues to make solid fuels and biochar. To counter the high forest residues logistics costs, researchers proposed portable systems [75] that can use biomass such as forest residues efficiently at near-forest setups to produce biofuels and bioproducts such as WCB, TWCB, and biochar. We estimated MSPs of WCB, TWCB, and biochar produced through portable systems to be $161.5, $274.3, and $1044.2/ODMT respectively. The estimated MSPs of WCB was in the range of domestic (i.e., $144-$206/ODMT) and export (i.e., $154-$177/ODMT) sales prices for densified biomass [22].

At present commercial markets for torrefied-densified biomass are either niche [23] or nonexistent [76]. Several studies have shown that the production cost of torrefied-pellets was higher (up to 50%) than white pellets [38, 77]. Pirraglia et al.[40] estimated a torrefied-pellets delivered cost of $282/ODMT (production cost was $190/ODMT) for a large-scale plant (100,000 MT/year) assuming input biomass cost of $45/ODMT. The production cost (i.e., $120-$190/MT) torrefied-pellets varied widely depending on plant capacity and feedstocks cost [38, 78]. Similarly, market selling price varied due to considerable uncertainties of market, feedstocks, and technology [76].

The current market for biochar is limited but diverse. The global market price ($80-$13,480/ODMT) of biochar varies widely based on biochar quality and application [9]. The potential demand for biochar is large considering its use as a soil amendment in the agricultural and landscaping sectors. However, the affordable price for biochar use in agriculture will be much

lower than other industries considering amounts necessary to show improvements in soil health and productivity, excluding other environmental benefits [52].

At the large-scale production of biochar (723 ODMT of biochar/day), the MSPs were estimated to be $346/ODMT considering a 36% biochar yield [39]. The assumptions related to biochar yield (i.e., 36-58%) [79] for the large-scale facility were much higher than small scale (~24%) or portable systems (~14.1%) [80]. Biochar yield and its quality (i.e., fixed carbon content) are inversely related [55], i.e., low yield may produce very high-quality biochar (fetch high market price [81]) and vice versa. Shabangu et al. [79] estimated biochar MSP of $220-$280/ODMT assuming a plant capacity with annual biomass consumption capacity of 0.8 million MT and biochar yield of 56%-26%. Biochar production cost in the small portable system was very high due to inefficient use of labor, low biochar yield, and diseconomies of scale. For example, the operational cost of biochar production using portable systems were about $450 [80] and $406 [68] per MT of biochar.

A significantly large portion (>50%) of the BCT biochar production's operational cost was labor [82]. Incorporating capital cost and margin, the estimated MSP of biochar in this study ($1044/ODMT) corresponds to the higher costs in previous studies that were calculated for portable systems compared to large-scale production systems.

The major reason for this high MSP of biochar comes not only from labor but also assumptions related to lower biochar yield at the smaller scale, the biochar machine's productivity and annual working hours [68]. The MSP of biochar as well as other products could be reduced by improving technology, yield, and productivity. We have discussed the different improvements in the technology and productivity with optimistic assumptions regarding potential reductions in biochar's MSP. A similar approach can be utilized to estimate the reduction in the MSP of both WCB and TWCB.

Figure 7 shows the most sensitive parameters affecting the MSP of three products. Furthermore, the variations in the MSPs of final products (i.e., TWCB and biochar) and potential reduction in their MSPs with respect to a set of critical input parameters are presented in figures 8 and 9.

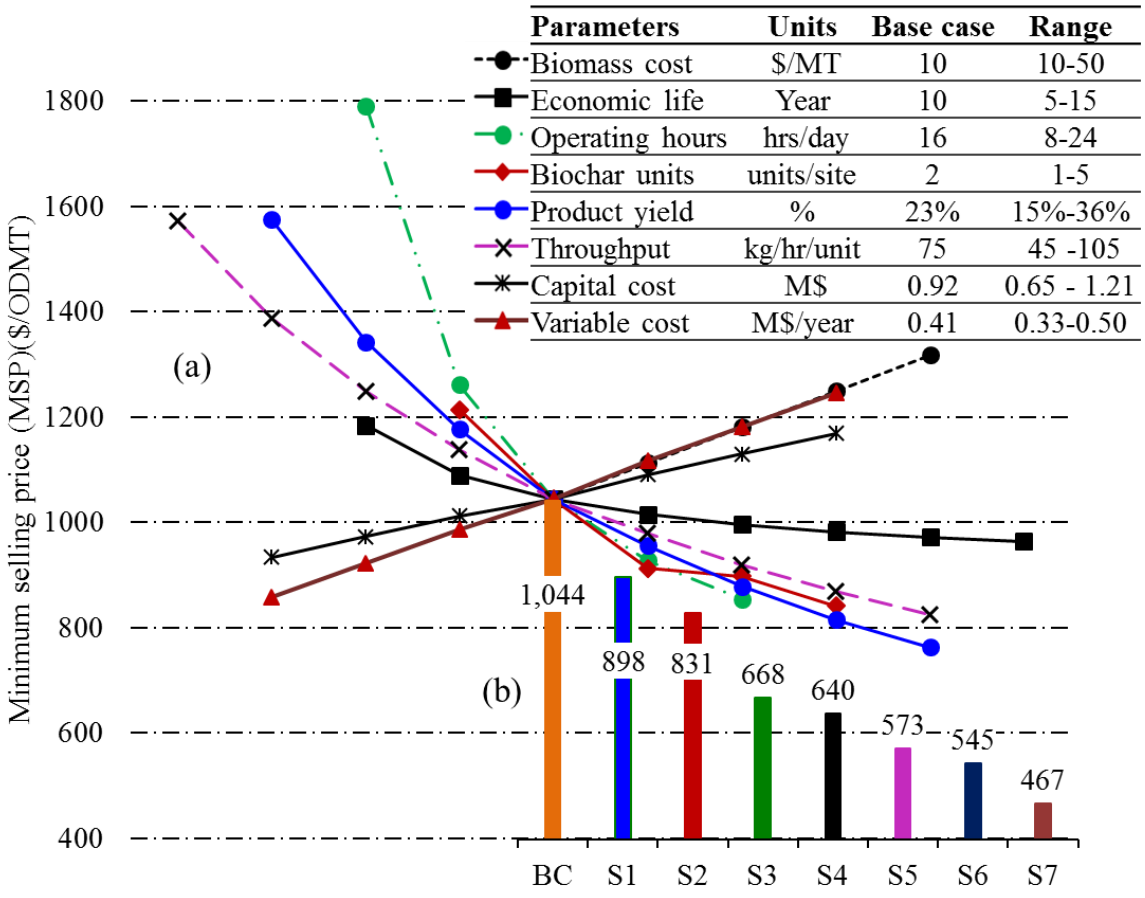

BC: Base case, S1: Biochar yield (24% → 30%), S2: No. of Biochar units (2 → 4), S3: Operating hours (16 → 24 hours/day), S4: Economic life (10 → 15 years), S5: Throughput (30% increase), S6: Capital cost (20% reduction), and S7: Operating cost (20% reduction)

Figure 8: (a) Impact of variations in the most sensitive parameters on biochar MSP and (b) An example of a reduction in biochar MSP w.r.t. probable improvements

The largest decrease in the MSP could come by improving system capacity such as increasing the daily operating hours from 16 to 24 hours. It had been proposed that more than one biochar unit could be used at the BCT site to increase the annual biochar production capacity leading to more efficient utilization of both labor and logistics [54]. A 20% reduction in the MSP alone can be achieved if five biochar units are used in parallel at a BCT location. Similar dramatic reductions of MSP could be achieved by improving the biochar machine's throughput. There are opportunities for improvements in throughput, reduction in electricity use, and increase in the biochar yield as demonstrated by Severy et al.[58] They have achieved various improvements by adding dual augers in place of a single auger to remove biochar from the system. The realized

improvements were (i) throughput increased by 45%, (ii) biochar yield increased by 21%, and (iii) energy use decreased by 61%.

Figure 8 (b) illustrates the possible reduction of the biochar MSP if these seven options could be adopted, assuming that our assumptions hold and that there are no detrimental unforeseen impacts. The cumulative effect of these changes could reduce the MSP of biochar from $1044/ODMT to $467/ODMT. In addition, it was assumed that biochar would be packed and transported in bags. If biochar is delivered in large scale, bagging may not be required, which may result in an additional cost reduction of $124/ODMT and MSP could be reduced to $364/ODMT (not shown in figure 8 b).

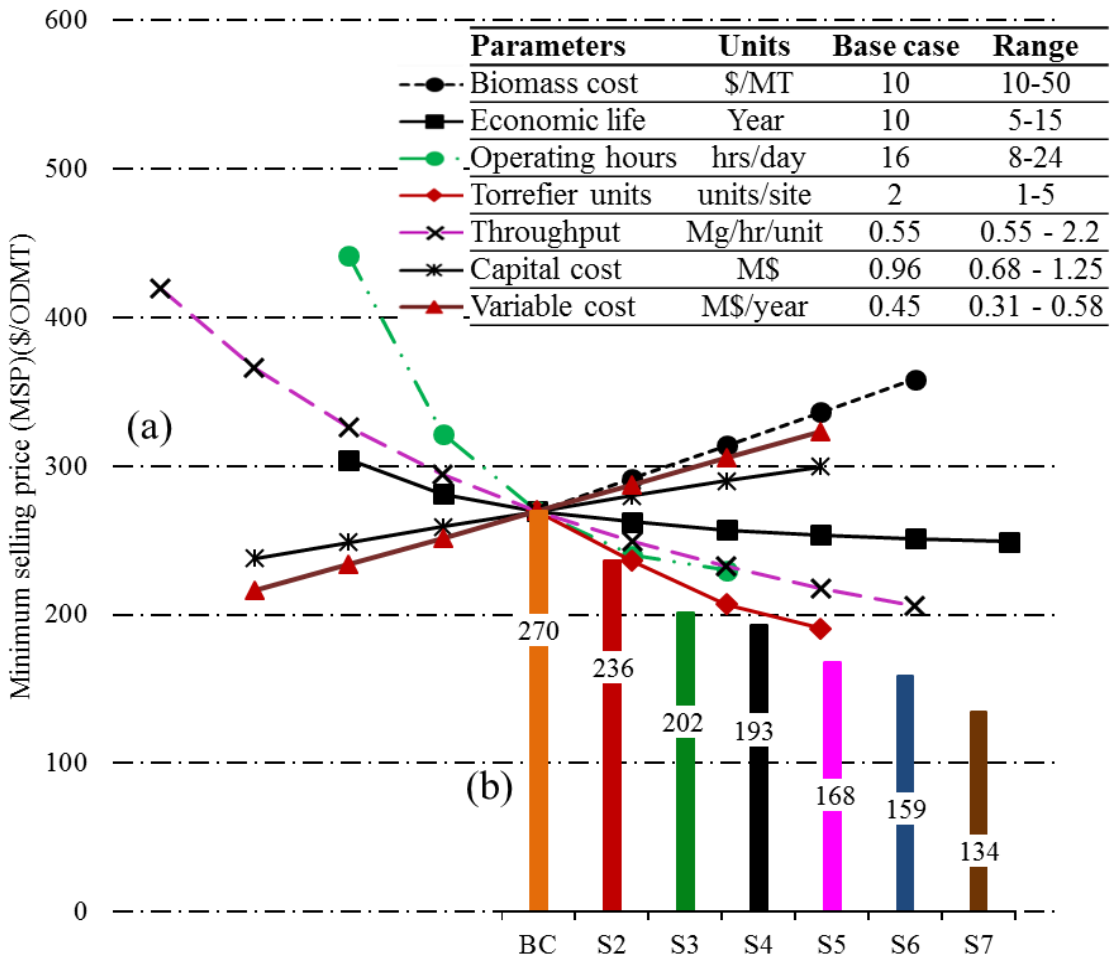

BC: Base case, S2: No. of torrefier units (2 → 4), S3: Operating hours (16 → 24 hours/day), S4: Economic life (10 → 15 years), S5: Throughput (30% increase), S6: Capital cost (20% reduction), and S7: Operating cost (20% reduction)

Figure 9: (a) Impact of variations in the most sensitive parameters on MSP of TWCB and (b) An example of a reduction in MSP of TWCB w.r.t. probable improvements

For TWCB, the most sensitive parameters that could reduce the MSP were similar to biochar except TWCB yield. In the torrefaction process, the mass yield varies from 70-90%, which is much larger than the biochar production process. Figure 9(b) shows the reduction of the MSP of TWCB assuming a series of system improvements and relaxation of assumptions. The accumulated reduction was ~50% of base case MSP ($270/ODMT). In the future with the advancement of technology and reduction in capital and operational expenses, biochar and TWCB production should be economical and competitive compared with alternatives coming from fossil-based resources without considering governmental subsidies and other sources of revenues that may be achieved by selling environmental benefits.

The MSPs estimated in this paper were calculated considering the direct revenues from selling products. There are other sources of revenues or credits that may be expected at present and in the future such as renewable energy certificate (REC)[18, 83], low carbon fuel standard (LCFS) [20], etc. The social cost of carbon (in 2007, $/MT of CO_2) was estimated to be about $105 in 2015 and is projected to increase to $212 by 2050.[17, 84] The densified solid fuels (i.e., WCB and TWCB) considered in this study have potential to reduce GHG emissions and be eligible to earn credits such as REC to support RPS in the United States [85]. The compliance market price of REC has varied widely and reached about $60/MWh in 2015 [83].

The LCFS in the state of California provide credits that varied between $20 and $120 per MT of CO_2 reduction in 2013 and 2016 respectively [20]. There has been strong growth projected for the use of densified biomass in domestic and export markets (15% for next 5 years from 2017 onwards[86]) [21].

On the other hand, catastrophic forest fires in the U.S. have destroyed millions of hectares of lands and caused loss in billions of dollars of property and life. There is a consistent increase in the cost of suppressing forest fires. If the government can provide credits to remove excess fuels from forests through thinning or removing forest residues after logging operations, the portable BCT technologies may be able to economically produce WCB or TWCB or biochar with MSPs that are affordable to large-scale consumers such as farmers for agricultural use. This will also help to drive the rural economy, generate jobs, reduce the risk of forest fire, and fulfill increasing energy demands while reducing fossil GHG emissions.

5. Conclusions

In this paper, we've analyzed the mass and energy balances of portable/relocatable BCTs using input data from pilot scale experimental setups and developed comprehensive economic models (i.e., based on a discounted cash flow rate of return (DCFROR)) to quantify the financial performance of each system. The core model provides critical financial feasibility indicators including minimum selling price (MSP) of woodchip briquettes (WCB), torrefied woodchip briquettes (TWCB), and biochar produced from forest residues using portable biomass conversion technology (BCT) systems at near-forest setups. In these systems, the largest costs came from capital investment (17%-32%) and labor (25%-30%). Woodchips drying contributed about 16% of total cost in WCB production due to the requirement of an external heat source, i.e., propane. A large portion of the total cost was due to product packaging and transport in the biochar production due to its low bulk density, i.e., 100 kg/m^3.

The estimated MSPs (providing a nominal before tax and finance IRR of 16.5%) for WCB, TWCB, and biochar were $161.5, $274.3, $1044.2/ODMT delivered to customers 200 km from BCT sites. The MSP of WCB and TWCB were either lower or in the range of the current market price of densified pellets or torrefied densified pellets. The MSP of biochar was lower than the current market price (for niche markets such as landscaping or nutrient removal for water treatment plants, etc.). The price of biochar estimated here is comparable to other studies but much higher than an affordable price by farmers for most agricultural applications.

The sensitivity analysis performed in this paper identified most sensitive parameters affecting MSP of these products and the scopes of improvements. A detailed analysis of required improvements to reduce the MSP of biochar was illustrated in figure 8. It was estimated that the MSP of biochar produced through the portable system could be reduced from $1044 to $364/ODMT considering seven improvement strategies. Considering different credits and benefits, additional MSP reductions for these products can be realized.

The higher the market price of a product than its calculated MSP, the better is the financial feasibility of making that product (i.e., potentially higher financial gain by selling that product). In the U.S., the domestic market price of WCB is much higher than its calculated MSP in this study. Similarly, the estimated MSP of TWCB is close to its domestic market price of briquettes but

TWCB has a higher energy content than WCB. If a premium price can be achieved for this premium energy product, then TWCB may be profitable. But the markets for TWCB are still in their infancy. The current market price of biochar is varied widely and uncertain and while the biochar's estimated MSP was within the range of current market prices, those prices may come down as markets and technologies develop. Biochar production is economical perhaps for current niche markets but it may require certain additional credits (i.e., carbon credits) for better financial performance before it will be used for widespread agricultural application.

But there are many tipping points needs to be studied before making a decision about the most preferable options to use forest residues such as (i) market dynamics, i.e., supply and demand affecting market price of a product [81], (ii) forest owners may ask for a premium for selling forest residues that may increase the cost of production, (iii) government policies and etc [87]. Other than economic benefits, the environmental and social benefits may influence decisions regarding the best options to use forest residues.

In summary, the production of WCB, TWCB, and biochar using portable systems looks to be economical and promising. The economic model developed in this study can be used by investors and stakeholders in the area of bioenergy and bioproducts to make scientific financial decisions. The results provide critical information to all stakeholders and policymakers for a better understanding of the use of forest residues to produce solid biofuels and biochar. In the U.S., if forest thinning will be adopted to mitigate wildfire; these portable BCT systems appear to be options worth considering to use forest residues, produce renewable fuels and biochar, create jobs, and mitigate climate change by reducing GHG emissions.

Acknowledgment

This material is based upon work supported by a grant from the U.S. Department of Energy under the Biomass Research and Development Initiative program: Award Number DE-EE0006297.

References

[1] Pachauri RK, Allen MR, Barros VR, Broome J, Cramer W, Christ R, et al. Climate change 2014: synthesis report. Contribution of Working Groups I, II and III to the fifth assessment report of the Intergovernmental Panel on Climate Change: IPCC; 2014.

[2] Agegnehu G, Srivastava AK, Bird MI. The role of biochar and biochar-compost in improving soil quality and crop performance: A review. Applied Soil Ecology. 2017;119:156-70.

[3] Lal R. Soil Carbon Sequestration Impacts on Global Climate Change and Food Security. Science. 2004;304:1623-7.

[4] C. B, A. BR, D. JC, K. W. Will Fire Danger Be Reduced by Using Solar Radiation Management to Limit Global Warming to 1.5 °C Compared to 2.0 °C? Geophysical Research Letters. 2018;45:3644-52.

[5] Cook PS, Becker DR. State Funding for Wildfire Suppression in the Western US. 2017.

[6] Hsiang SM, Burke M. Climate, conflict, and social stability: what does the evidence say? Climatic Change. 2014;123:39-55.

[7] Guo M, Song W, Buhain J. Bioenergy and biofuels: History, status, and perspective. Renewable and Sustainable Energy Reviews. 2015;42:712-25.

[8] Crane-Droesch A. Biochar for sustainable agricultural intensification: technical/economic potential, and technology adoption 2015.

[9] Jirka S, Tomlinson T. State of the Biochar Industry—A survey of commercial activity in the biochar field. A report by the International Biochar Initiative Available at: www biochar-international org/sites/default/files/State_of_the_Biochar_Industry_2013 pdf. 2013.

[10] OSMRE. ANNUAL REPORT 2010-2011: Reclaiming Oversight, Reclaiming Communities. Washington, DC: Office of Surface Mining Reclamation and Enforcement 2011.

[11] Stone C, Hudak AT, Morgan P. Forest harvest can increase subsequent forest fire severity. Proceedings of the Second International Symposium on Fire Economics, Planning, and Policy: A Global View. Córdoba, Spain.2004.

[12] Page-Dumroese DS, Busse MD, Archuleta JG, McAvoy D, Roussel E. Methods to Reduce Forest Residue Volume after Timber Harvesting and Produce Black Carbon. Scientifica. 2017;2017:8.

[13] Berrill J-P, Han H-S. Carbon, Harvest Yields, and Residues from Restoration in a Mixed Forest on California's Coast Range. Forest Science. 2017;63:128-35.

[14] Johnson JF, Bengston DN, Fan DP. US Policy Response to the Wildfire Fuels Management Problem: An Analysis of the News Media Debate about the Healthy Forests Initiative and the Healthy Forests Restoration Act. Journal of Environmental Policy & Planning. 2009;11:129-42.

[15] Polagye BL, Hodgson KT, Malte PC. An economic analysis of bio-energy options using thinnings from overstocked forests. Biomass and Bioenergy. 2007;31:105-25.

[16] Langholtz M, Stokes B, Eaton L. 2016 Billion-ton report: Advancing domestic resources for a thriving bioeconomy, Volume 1: Economic availability of feedstock. 2016.

[17] Barbose G, Bird L, Heeter J, Flores-Espino F, Wiser R. Costs and benefits of renewables portfolio standards in the United States. Renewable and Sustainable Energy Reviews. 2015;52:523-33.

[18] Barbose G. U.S. Renewables Portfolio Standards: 2017 Annual Status Report. 2017.

[19] Stock JH. The Renewable Fuel Standard: A Path Forward. Center on Global Energy Policy, Columbia University. 2015.

[20] Yeh S, Witcover J. Status Review of California's Low Carbon Fuel Standard, 2011-2015. 2016.

[21] Thrän D, Peetz D, Schaubach K. Global Wood Pellet Industry and Trade Study 2017. IEA; 2017.

[22] US-EIA. Monthly Densified Biomass Fuel Report. 2017.

[23] Thrän D, Witt J, Schaubach K, Kiel J, Carbo M, Maier J, et al. Moving torrefaction towards market introduction – Technical improvements and economic-environmental assessment along the overall torrefaction supply chain through the SECTOR project. Biomass and Bioenergy. 2016;89:184-200.

[24] Meyer S, Glaser B, Quicker P. Technical, Economical, and Climate-Related Aspects of Biochar Production Technologies: A Literature Review. Environmental Science & Technology. 2011;45:9473-83.

[25] Roberts KG, Gloy BA, Joseph S, Scott NR, Lehmann J. Life Cycle Assessment of Biochar Systems: Estimating the Energetic, Economic, and Climate Change Potential. Environmental Science & Technology. 2010;44:827-33.

[26] Field JL, Keske CMH, Birch GL, DeFoort MW, Cotrufo MF. Distributed biochar and bioenergy coproduction: a regionally specific case study of environmental benefits and economic impacts. GCB Bioenergy. 2013;5:177-91.

[27] Qambrani NA, Rahman MM, Won S, Shim S, Ra C. Biochar properties and eco-friendly applications for climate change mitigation, waste management, and wastewater treatment: A review. Renewable and Sustainable Energy Reviews. 2017;79:255-73.

[28] Kammann C, Ippolito J, Hagemann N, Borchard N, Cayuela ML, Estavillo JM, et al. Biochar as a tool to reduce the agricultural greenhouse-gas burden – knowns, unknowns and future research needs. Journal of Environmental Engineering and Landscape Management. 2017;25:114-39.

[29] GrandViewResearch. Biochar Market Size, Share & Trend Analysis By Technology (Pyrolysis, Gasification, Others), By Application (Agriculture (Farming, Livestock) By Region & Segment Forecasts, 2012 - 2025. 2017.

[30] WTW. Waste To Wisdom. 2018.

[31] Kizha AR, Han H-S. Processing and sorting forest residues: Cost, productivity and managerial impacts. Biomass and Bioenergy. 2016;93:97-106.

[32] Yazan DM, van Duren I, Mes M, Kersten S, Clancy J, Zijm H. Design of sustainable second-generation biomass supply chains. Biomass and Bioenergy. 2016;94:173-86.

[33] Wright MM, Brown RC, Boateng AA. Distributed processing of biomass to bio-oil for subsequent production of Fischer-Tropsch liquids. Biofuels, Bioproducts and Biorefining. 2008;2:229-38.

[34] Sahoo K, Mani S. Techno-economic assessment of biomass bales storage systems for a large-scale biorefinery. Biofuels, Bioproducts and Biorefining. 2017;11:417-29.

[35] Tumuluru JS, Wright CT, Hess JR, Kenney KL. A review of biomass densification systems to develop uniform feedstock commodities for bioenergy application. Biofuels, Bioproducts and Biorefining. 2011;5:683-707.

[36] Shankar Tumuluru J, G Cafferty K, L Kenney K. Techno-economic Analysis of Conventional, High Moisture Pelletization and Briquetting Process. 2014 Montreal, Quebec Canada July 13 – July 16, 2014. St. Joseph, MI: ASABE; 2014. p. 1.

[37] Severy MA, Chamberlin CE, Eggink AJ, Jacobson AE. Demonstration of a Pilot-Scale Plant for Biomass Torrefaction and Briquetting. Applied Engineering in Agriculture. 2018;34:85-98.

[38] Kumar L, Koukoulas AA, Mani S, Satyavolu J. Integrating Torrefaction in the Wood Pellet Industry: A Critical Review. Energy Fuels. 2017;31:37-54.

[39] Brown TR, Wright MM, Brown RC. Estimating profitability of two biochar production scenarios: slow pyrolysis vs fast pyrolysis. Biofuels, Bioproducts and Biorefining. 2011;5:54-68.

[40] Pirraglia A, Gonzalez R, Saloni D, Denig J. Technical and economic assessment for the production of torrefied ligno-cellulosic biomass pellets in the US. Energy Conversion and Management. 2013;66:153-64.

[41] Sahoo K, Mani S, Das L, Bettinger P. GIS-based assessment of sustainable crop residues for optimal siting of biogas plants. Biomass and Bioenergy. 2018;110:63-74.

[42] Sahoo K, Hawkins GL, Yao XA, Samples K, Mani S. GIS-based biomass assessment and supply logistics system for a sustainable biorefinery: A case study with cotton stalks in the Southeastern US. Applied Energy. 2016;182:260-73.

[43] Mirkouei A, Mirzaie P, Haapala KR, Sessions J, Murthy GS. Reducing the cost and environmental impact of integrated fixed and mobile bio-oil refinery supply chains. Journal of Cleaner Production. 2016;113:495-507.

[44] Espinoza Pérez AT, Camargo M, Narváez Rincón PC, Alfaro Marchant M. Key challenges and requirements for sustainable and industrialized biorefinery supply chain design and management: A bibliographic analysis. Renewable and Sustainable Energy Reviews. 2017;69:350-9.

[45] Chai L, Saffron CM. Comparing pelletization and torrefaction depots: Optimization of depot capacity and biomass moisture to determine the minimum production cost. Applied Energy. 2016;163:387-95.

[46] Sahoo K, Bilek EM, Mani S. Techno-economic and environmental assessments of storing woodchips and pellets for a bioenergy plant. Athens, Georgia, USA: University of Georgia; 2018.

[47] Braimakis K, Atsonios K, Panopoulos KD, Karellas S, Kakaras E. Economic evaluation of decentralized pyrolysis for the production of bio-oil as an energy carrier for improved logistics towards a large centralized gasification plant. Renewable and Sustainable Energy Reviews. 2014;35:57-72.

[48] Badger PC, Fransham P. Use of mobile fast pyrolysis plants to densify biomass and reduce biomass handling costs—A preliminary assessment. Biomass and Bioenergy. 2006;30:321-5.

[49] Lacoa U, Velarde G, Kay M, Blanco E, Saloni DE. Design and Development of Logistics Models for Residential and Commercial Biomass Pellets for Heat and Power Generation in the US. BioResources. 2017;12:1506-31.

[50] Berry M. Evaluating Transportable Conversion Facilities for a Forest Biomass Supply Chain in the Pacific Northwest, USA 2017.

[51] Eggink A, Palmer K, Severy M, Carter D, Jacobson A. Utilization of wet forest biomass as both the feedstock and electricity source for an integrated biochar production system. Applied Engineering in Agriculture. 2018;34:125-34.

[52] Vochozka M, Maroušková A, Váchal J, Straková J. Biochar pricing hampers biochar farming. Clean Technologies and Environmental Policy. 2016;18:1225-31.

[53] Palma MA, Richardson JW, Roberson BE, Ribera LA, Outlaw J, Munster C. Economic feasibility of a mobile fast pyrolysis system for sustainable bio-crude oil production. International Food and Agribusiness Management Review. 2011;14.

[54] Berry M, Sessions J. The Economics of Biomass Logistics and Conversion Facility Mobility: An Oregon Case Study. . Applied Engineering in Agriculture. 2018;34:57-72.

[55] Severy M, Carter D, Chamberlin C, Jacobson A. Biochar testing results report. Humboldt State University; 2016.

[56] Bergman RD, Zerbe JI. Primer on wood biomass for energy: USDA Forest Service, State and Private Forestry Technology Marketing Unit, Forest Products Laboratory; 2004.

[57] Severy MA, Chamberlin CE, Eggink AJ, Jacobson AE. BRIQUETTER TESTING AND RESULTS: Testing in a Commercial Setting. 2016.

[58] Severy MA, David JC, Kyle DP, Anthony JE, Arne EJ. Performance and emissions control of commercial-scale biochar production unit. Applied Engineering in Agriculture. 2018;34:73-84.

[59] Sang-Kyun Han, Han-Sup Han, Bisson JA. Effects of Grate Size on Grinding Productivity, Fuel Consumption, and Particle Size Distribution. Forest Products Journal. 2015;65:209-16.

[60] Bisson JA, Han H-S. Quality of feedstock produced from sorted forest residues. American Journal of Biomass and Bioenergy. 2016;5:81-97.

[61] Sahoo K, Bilek EM, Bergman RD, Mani S. Economic analysis of forest residues logistics options to produce bioenergy and bioproducts. Forest Products Laboratory; 2018.

[62] ALL-Power-Labs. ALL Power Labs. 2017.

[63] Adams PWR, Shirley JEJ, McManus MC. Comparative cradle-to-gate life cycle assessment of wood pellet production with torrefaction. Applied Energy. 2015;138:367-80.

[64] Alanya-Rosenbaum S, Bergman RD, Ganguly I, Pierobon F. A comparative life-cycle assessment of briquetting logging residues and lumber manufacturing coproducts in Western United States. Applied Engineering in Agriculture. 2018;34:11.

[65] US-EPA. Economic study of bioenergy production from digesters at dairies in california. 2008.

[66] Coppedge B, Coppedge G, Evans D, Jensen J, Kanoa E, Scanlan K, et al. Renewable Natural Gas and Nutrient Recovery Feasibility for Deruyter Dairy. Report prepared for Washington State Department of Commerce: Olympia, Washington2012.

[67] Stolarski MJ, Szczukowski S, Tworkowski J, Krzyżaniak M, Gulczyński P, Mleczek M. Comparison of quality and production cost of briquettes made from agricultural and forest origin biomass. Renewable Energy. 2013;57:20-6.

[68] Kim D, Anderson NM, Chung W. Financial performance of a mobile pyrolysis system used to produce biochar from sawmill residues. Forest Products Journal. 2015;65:189-97.

[69] Turhollow A, Wilkerson E, Sokhansanj S. Cost methodology for biomass feedstocks: herbaceous crops and agricultural residues. ORNL/TM-2008/105 Oak Ridge National Laboratory, Oak Ridge, TN. 2009.

[70] BLS. Occupational Employment Statistics. Bureau of labor statistics; 2017.

[71] ASAE. Agricultural Machinery Management. ASAE; 2011.

[72] Sahoo K, Mani S. Engineering Economics of Cotton Stalk Supply Logistics Systems for Bioenergy Applications. Transactions of the ASABE. 2016;59.

[73] Severy M, Carter D, Chamberlin C, Jacobson A. REMOTE POWER GENERATION Part 1: Technology Selection Waste to Wisdom: Subtask 2.7. 2016.

[74] Jones SB, Meyer PA, Snowden-Swan LJ, Padmaperuma AB, Tan E, Dutta A, et al. Process design and economics for the conversion of lignocellulosic biomass to hydrocarbon fuels: fast pyrolysis and hydrotreating bio-oil pathway. Pacific Northwest National Laboratory (PNNL), Richland, WA (US); 2013.

[75] Ruan RR, Chen P, Hemmingsen R, Morey V, Tiffany D. Size matters: small distributed biomass energy production systems for economic viability. International Journal of Agricultural and Biological Engineering. 2008;1:64-8.

[76] Nunes LJR, Matias JCO, Catalão JPS. A review on torrefied biomass pellets as a sustainable alternative to coal in power generation. Renewable and Sustainable Energy Reviews. 2014;40:153-60.

[77] Arpiainen V, Wilen C, Barnó CJG, Godoy FJL, Pommer UL, Nordin A, et al. Production of Solid Sustainable Energy Carriers from Biomass by Means of Torrefaction. 2014.

[78] Agar DA. A comparative economic analysis of torrefied pellet production based on state-of-the-art pellets. Biomass and Bioenergy. 2017;97:155-61.

[79] Shabangu S, Woolf D, Fisher EM, Angenent LT, Lehmann J. Techno-economic assessment of biomass slow pyrolysis into different biochar and methanol concepts. Fuel. 2014;117:742-8.

[80] Chung W, Kim D, Anderson N. Productivity and cost analysis of a mobile pyrolysis system deployed to convert mill residues into biochar. Proceedings of the 35th Annual Meeting of the Council on Forest Engineering: Engineering New Solutions for Energy Supply and Demand New Bern, NC. Morgantown, WV2012.

[81] Sasatani D, Eastin IL. Demand Curve Estimation of Locally Produced Woody Biomass Products. Applied Engineering in Agriculture. 2018;34:145.

[82] Brown AL, Brady PD. A Technoeconomic Analysis of the Potential for Portable Pyrolysis in Northern New Mexico Forests. Proceedings of the ASME 2012 Summer Heat Transfer Conference. Rio Grande, Puerto Rico2012. p. 161-71.

[83] OShaughnessy EJ, Volpi CM, Heeter JS, Cook JJ. Status and Trends in the US Voluntary Green Power Market (2016 Data). National Renewable Energy Lab.(NREL), Golden, CO, USA; 2017.

[84] Group IW. Technical Support Document: Technical Update of the Social Cost of Carbon for Regulatory Impact Analysis under Executive Order 12866. 2016.

[85] Jones G, Loeffler D, Calkin D, Chung W. Forest treatment residues for thermal energy compared with disposal by onsite burning: Emissions and energy return. Biomass and Bioenergy. 2010;34:737-46.

[86] Lang A, Copley A. Global Industrial Wood Pellet Demand Forecast and U.S. Wood Bioenergy Update: Q3 2017. Forisk Consulting; 2017.

[87] Staples MD, Malina R, Olcay H, Pearlson MN, Hileman JI, Boies A, et al. Lifecycle greenhouse gas footprint and minimum selling price of renewable diesel and jet fuel from fermentation and advanced fermentation production technologies. Energy & Environmental Science. 2014;7:1545-54.